MOE Plumbing & Instrumentation Diagram

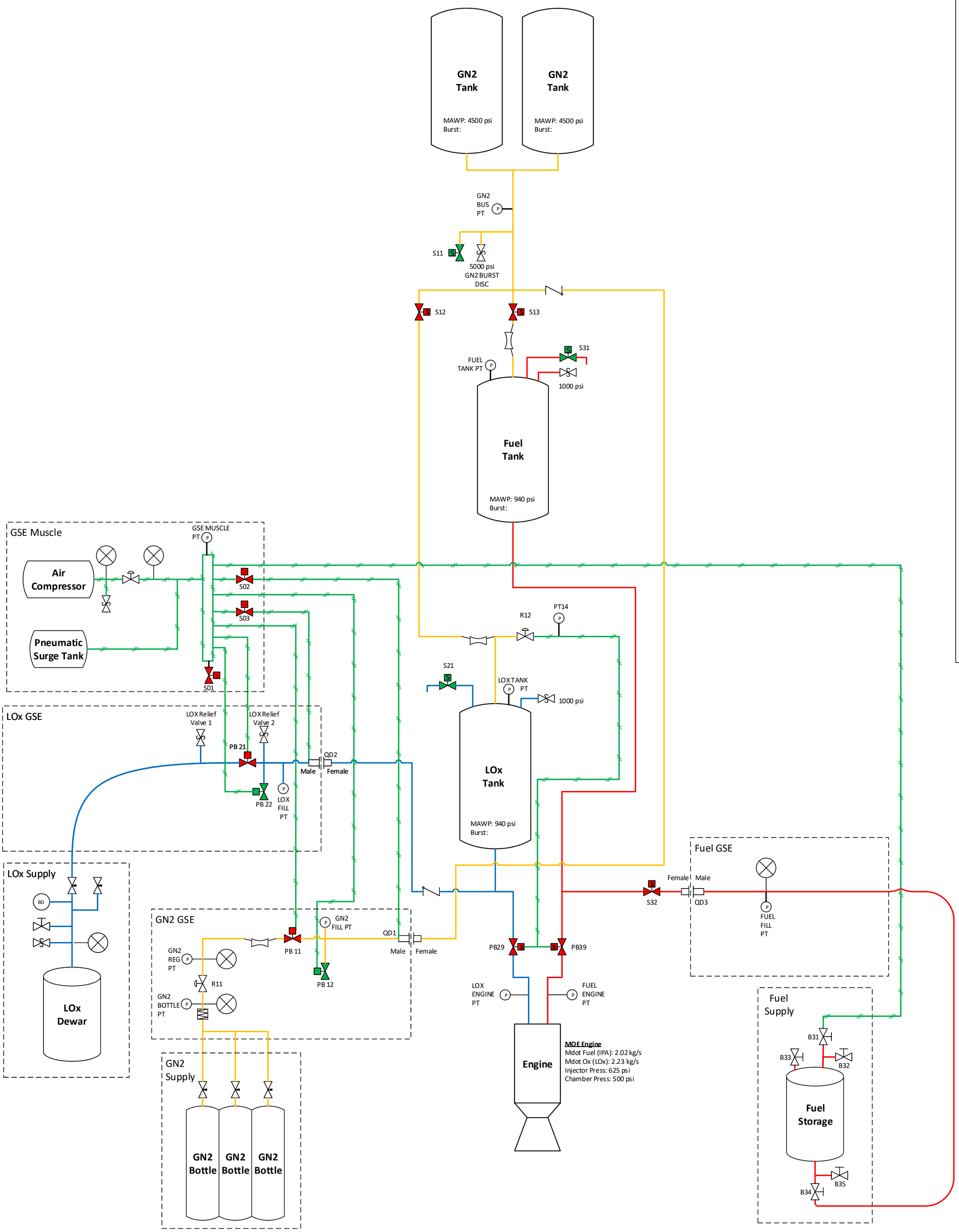

Experimental Rocket Propulsion Laboratory	
Version 1.4	
Created By: Steven Hodac	Updated By: Rex Gavsie
Created Date: 1/18/2024	Updated Date: 4/08/2026